TS-2 TYPE A BATHTUB-SHOWER COMBO

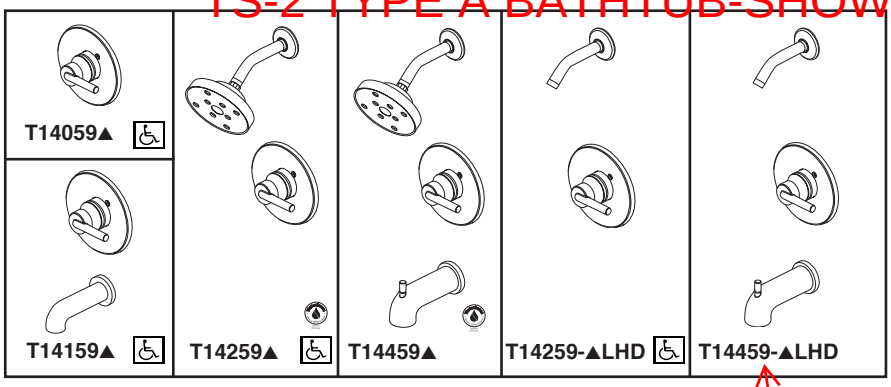

Submitted Model No.:_____

Specific Features:_____

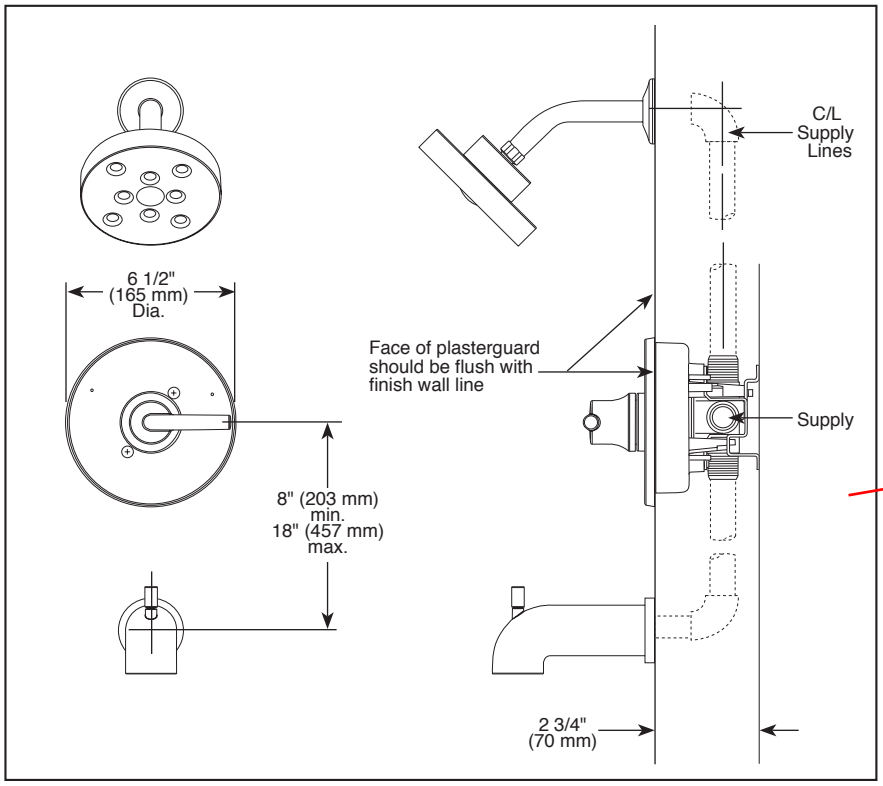

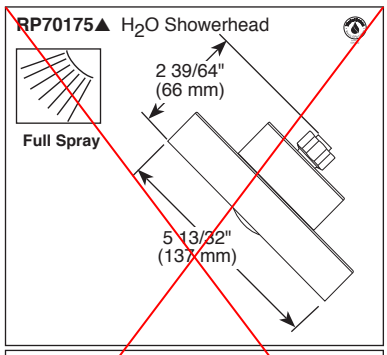

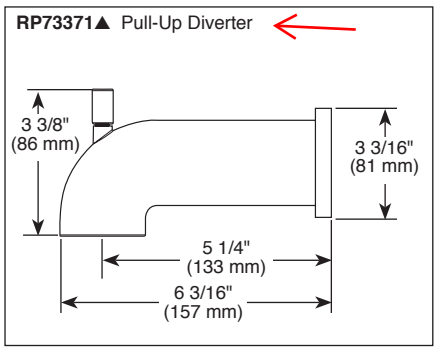

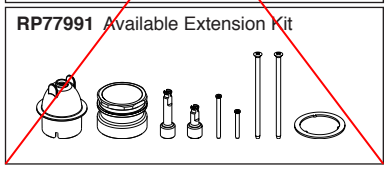

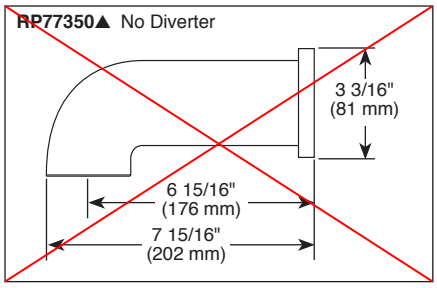

▲ Designate Proper Finish Suffix

DELTA

TUB AND SHOWER FAUCET TRIM

- Trinsic® Bath Collection
- Valve Only (T14059)
- Tub Only (T14159)
- Shower Only (T14259)
- Tub/Shower (T14459)

FEATURES:

- Monitor® 14 Series pressure balanced single handle bath mixing valve trim
- Single function H_2Okinetic® Technology showerhead

STANDARD SPECIFICATIONS:

- Maintains a balanced pressure of hot and cold water even when a valve is turned on or off elsewhere in the system
- For use with MultiChoice® Universal rough valve body (R10000 Series)
- Lever handle
- Temperature only controlled with handle
- Field adjustable means to limit handle rotation into hot water zone
- 120° maximum handle rotation
- ~~2.00 gpm @ 80 psi, 7.60 L/min @ 550 kPa~~
- Red/blue pad print temperature indicators on escutcheon
- "-LHD" models indicate less showerhead
- 1/2" CWT slip-on spout adapter
- Stem extension kit RP77991 can be ordered to allow for an additional 1 3/4" wall thickness. RP77991 ships with chrome escutcheon screws. For special finishes also order RP12630 escutcheon screws in desired finish.

WARRANTY

- Lifetime limited warranty on parts (other than electronic parts and batteries) and finishes: or, for commercial users, for 5 years from date of purchase.
- 5 year limited warranty on electronic parts (other than batteries); or, for commercial users, for 1 year from the date of purchase. No warranty is provided on batteries.

COMPLIES WITH:

- ASME A112.18.1 / CSA B125.1
- ASME 1016
- Indicates compliance to ICC/ANSI A117.1 - Valve control only
- EPA WaterSense®

DELTA FAUCET COMPANY

55 E. 111th Street, Indianapolis, Indiana 46280
350 South Edgeware Road, St. Thomas, ON N5P 4L1
© 2016 Masco Corporation of Indiana

Delta reserves the right (1) to make changes in specifications and materials, and (2) to change or discontinue models, both without notice or obligation. Dimensions are for reference only. See current full-line price book or www.deltafaucet.com for finish options and product availability.

DSP-B-T14059 Rev. H

TS-2 TYPE A BATHTUB-SHOWER COMBO

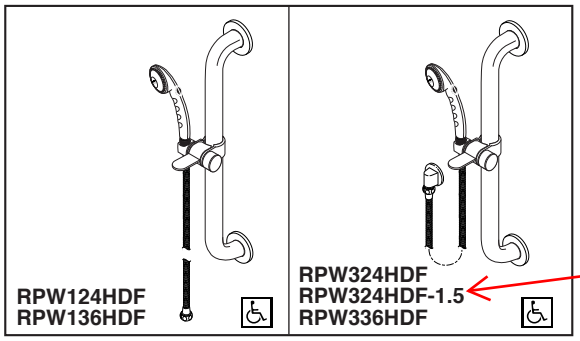

DELTA COMMERCIAL

BATH VALVES

■ Personal Hand Held Shower with Push Button On-Off Control-Not a Positive Shut Off

Submitted Model No.:_____

Specific Features:_____

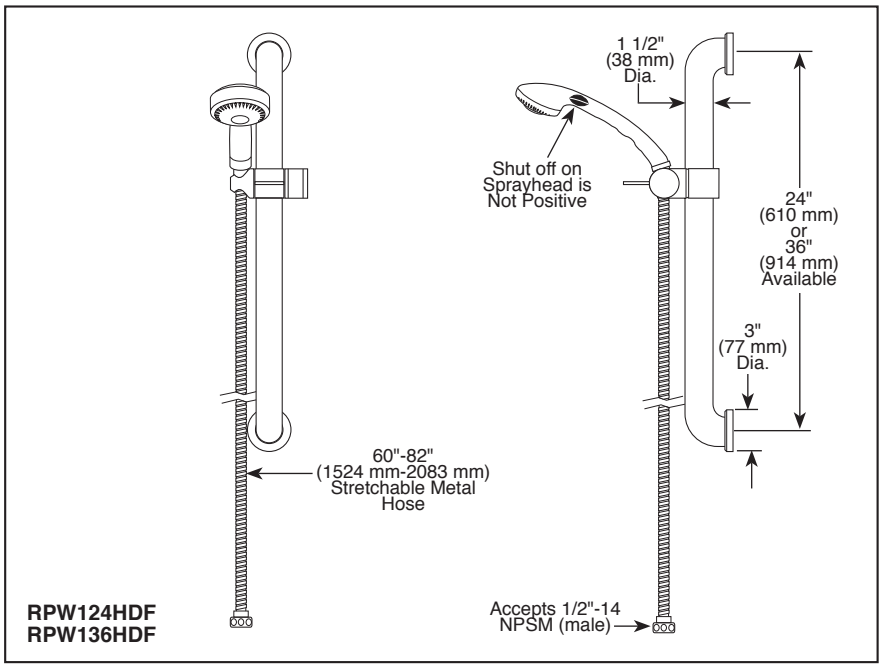

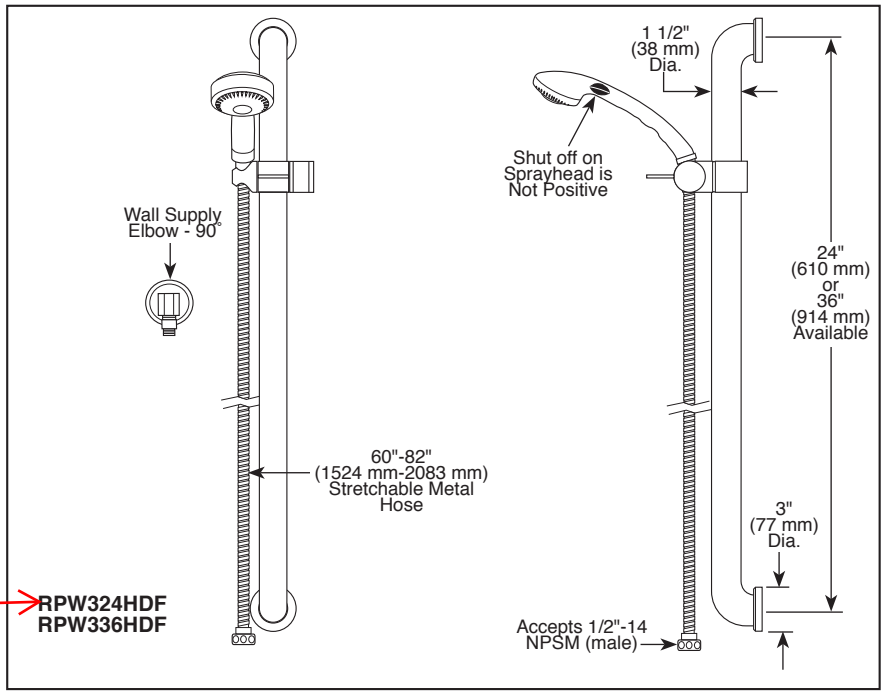

STANDARD SPECIFICATIONS:

- 2.50 gpm @ 80 psi (9.50 L/min @ 552 kPa) from sprayhead
- 1.50 gpm @ 60 psi for RPW324HDF-1.5
- Personal white ABS hand held shower with fixed spray with push button on-off control-not a postitive shut-off
- 60"-82" (1524 mm-2083 mm) stretchable metal hose
- 24" (610 mm) and 36" (914 mm) stainless steel finish slide/grab bar
- ADA compliant adjustable slide mechanism
- 90˚ chrome plated wall supply elbow, 1/2" IPS femle inlet; 1/2"-14 NPSM male threaded outlet (Models RPW324HDF and RPW336HDF only)
- Certified dual check valves for backflow protection

WARRANTY

- Lifetime limited warranty on parts (other than electronic parts and batteries) and finishes: or, for commercial users, for 5 years from date of purchase.
- 5 year limited warranty on electronic parts (other than batteries); or, for commercial users, for 1 year from the date of purchase. No warranty is provided on batteries.

COMPLIES WITH:

Indicates compliance to ICC/ANSI A117.1

- ASME A112.18.1 / CSA B125.1
- ASME A112.18.3

Delta reserves the right (1) to make changes in specifications and materials, and (2) to change or discontinue models, both without notice or obligation. Dimensions are for reference only. See current full-line price book or www.deltafaucet.com for finish options and product availability.

DELTA FAUCET COMPANY
55 E. 111th Street, Indianapolis, Indiana 46280
350 South Edgeware Road, St. Thomas, ON N5P 4L1
© 2016 Masco Corporation of Indiana

TS-2 TYPE A BATHTUB-SHOWER COMBO

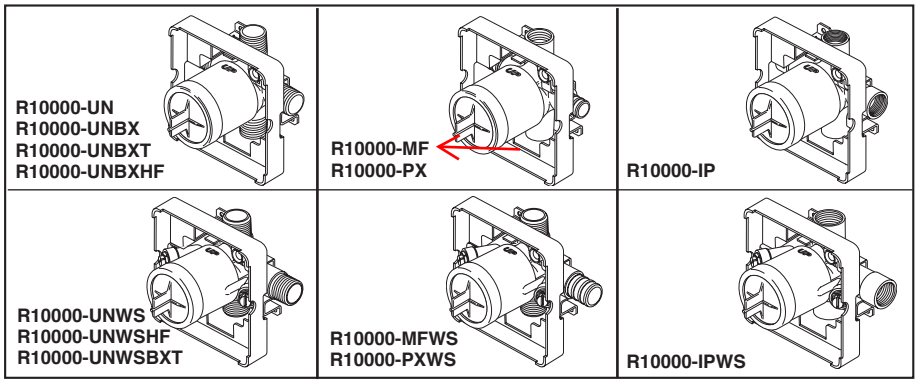

Submitted Model No.:_____

Specific Features:_____

R10000-UN
R10000-UNBX
R10000-UNBXT

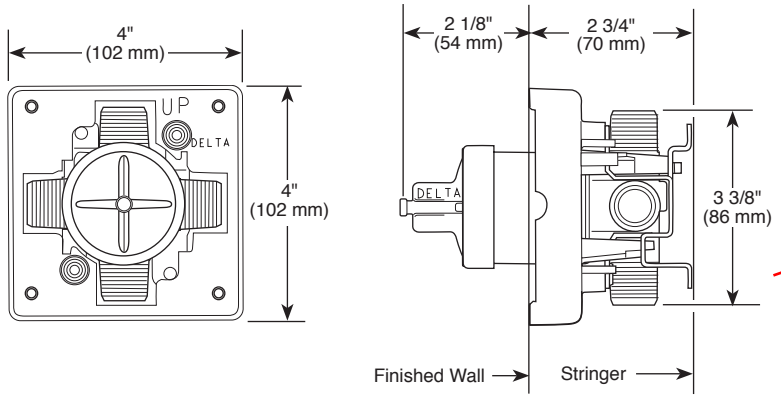

R10000-UNWS

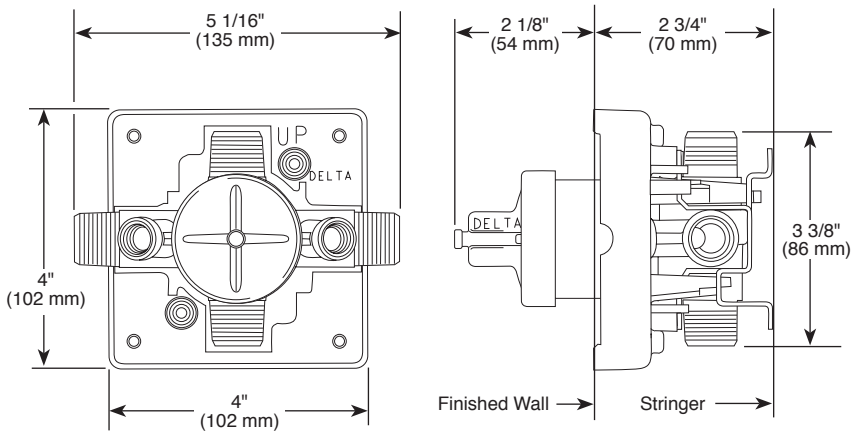

RP75136 Available Extension Kit

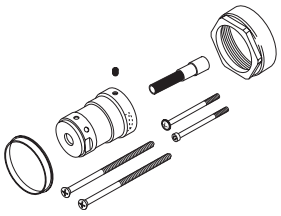

Delta reserves the right (1) to make changes in specifications and materials, and (2) to change or discontinue models, both without notice or obligation. Dimensions are for reference only. See current full-line price book or www.deltafaucet.com for finish options and product availability.

DSP-B-R10000 Rev. I

DELTA

MULTICHOICE® UNIVERSAL ROUGH VALVE BODY

- R10000-UN (Universal Inlets/Outlets)
- R10000-UNBX (Universal Single Box Model)
- R10000-UNBXHF (High Flow Shower Only)
- R10000-UNBXT (Thin Wall)
- R10000-UNWS (Universal with Stops)
- R10000-UNWSHF (High Flow with Stops)
- R10000-UNWSBXT (Thin Wall with Stops)
- R10000-PX (Pex Crimp Connections with UN Outlets)
- R10000-PXWS (Pex Crimp Connections with Stop with UN Outlets)
- R10000-IP (IPS Inlets/Outlets)
- R10000-IPWS (IPS with Stops)
- R10000-MF (Pex Cold Expansion Connections with UN Outlets)
- R10000-MFWS (Pex Cold Expansion with Stops with UN Outlets)

STANDARD SPECIFICATIONS:

- Forged brass body.
- Back-to-Back installation capabilities.
- Can be tested with air (200 PSI) or water (300 PSI) without valve using supplied test cap.
- Square plasterguard allows for right angle cuts.
- Thin wall mounting.
- For use with MultiChoice® Universal single or dual function trim. Cartridge ships with trim.
- 1/2" outlets and connections.

Note: No tub outlet in HF model.

Note: Should use proper fitting with each type (copper tubing, iron pipe, and pex fitting).

Note: Should use proper tooling with crimping pex fitting and cold expansion pex models.

Note: IP indicates female 1/2" threaded connections.

Note: UN indicates Universal type fitting and is 1/2" NPT male thread with 1/2" C.W.T. female sweat.

WARRANTY

- Lifetime limited warranty on parts (other than electronic parts and batteries) and finishes: or, for commercial users, for 5 years from date of purchase.
- 5 year limited warranty on electronic parts (other than batteries); or, for commercial users, for 1 year from the date of purchase. No warranty is provided on batteries.

COMPLIES WITH:

- ASME A112.18.1 / CSA B125.1

DELTA FAUCET COMPANY

55 E. 111th Street, Indianapolis, Indiana 46280
350 South Edgeware Road, St. Thomas, ON N5P 4L1
© 2015 Masco Corporation of Indiana

TS-2 TYPE A BATHTUB-SHOWER COMBO

RAPID-FIT®

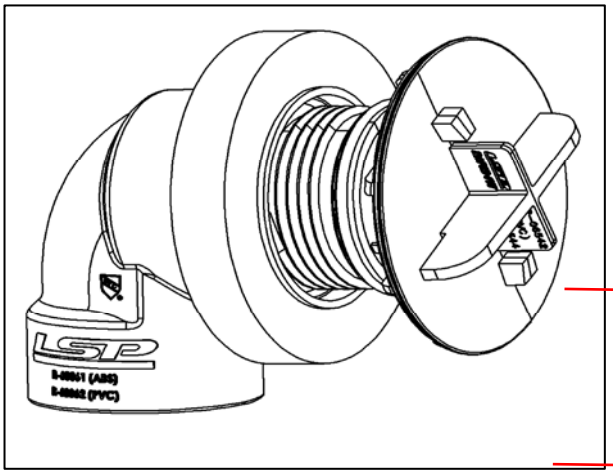

REVOLVER ™

Specification Sheet

ROUGH-IN KITS

NUMBER	DESCRIPTION
HALF KITS - No piping or tee	
R-6010-RK	Chrome, ABS Half kit
R-6011-RK	Chrome, PVC Half kit
FULL KITS - Includes piping and tee	
R-6110-RK	Chrome, ABS Full kit
R-6111-RK	Chrome, PVC Full kit
TRIM KITS	
R-0910	Chrome, Lift & Turn Stopper & Faceplate
R-0916	Chrome, Toe-Touch Stopper & Faceplate
R-0919	Chrome, Push-Pull Stopper & Faceplate

COMPLETE KITS (with Trim kit)

NUMBER	DESCRIPTION
HALF KITS - No piping or tee	
R-6010-LT	Chrome, ABS Half kit, Lift & Turn Stopper & Faceplate
R-6010-P	Chrome, ABS Half kit, Push-Pull Stopper & Faceplate
R-6010-T	Chrome, ABS Half kit, Toe-Touch Stopper & Faceplate
R-6011-LT	Chrome, PVC Half kit, Lift & Turn Stopper & Faceplate
R-6011-P	Chrome, PVC Half kit, Push-Pull Stopper & Faceplate
R-6011-T	Chrome, PVC Half kit, Toe-Touch Stopper & Faceplate
FULL KITS - Includes piping and tee	
R-6110-LT	Chrome, ABS Full kit, Lift & Turn Stopper & Faceplate
R-6110-P	Chrome, ABS Full kit, Push-Pull Stopper & Faceplate
R-6110-T	Chrome, ABS Full kit, Toe-Touch Stopper & Faceplate
R-6111-LT	Chrome, PVC Full kit, Lift & Turn Stopper & Faceplate
R-6111-P	Chrome, PVC Full kit, Push-Pull Stopper & Faceplate
R-6111-T	Chrome, PVC Full kit,Toe-Touch Stopper & Faceplate

DESIGN FEATURES

- Simplifies installation with only three parts required for a complete overflow assembly
- Single overflow assembly works with tubs from 1/8" to 7/16" thick
- Coarse thread allows for minimal turning to engage tub wall
- Low profile, snap-on faceplate
- Available in half kits and full kits; ABS and PVC
- Available in all major Designer Finishes

COMPLIANCES/LISTINGS

- Test cap capable of four story testing (20psi) without blowing out and is easily removed after test
- IAPMO Listed
- Meets ASME STD A112.18.2

Product Submittal	
Job Name	
Date	
Part Number	Quantity
Architect	
Contractor	

LSP® PRODUCTS GROUP

3689 Arrowhead Drive, Carson City, NV 89706
Phone (800) 854-3215 Fax (800) 243-1777
E-mail sales@lspproducts.com Website www.lspproducts.com

Content matter is subject to change at any time. It is the user's responsibility to ensure the most updated revisions are obtained.

RF/S-2010 (01-09)

TS-2 TYPE A BATHTUB-SHOWER COMBO

RAPID-FIT®

BATH WASTE ASSEMBLIES
SPECIFICATION SHEET

Lift and Turn and Push Pull

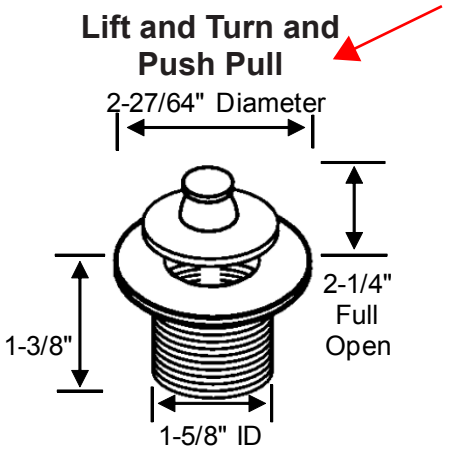

Toe Touch

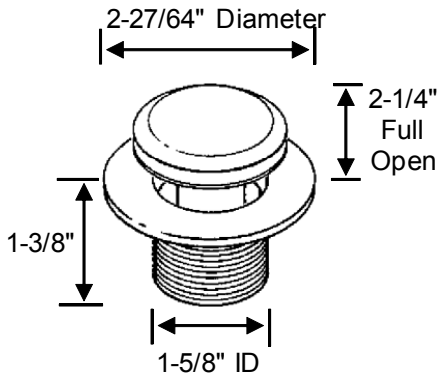

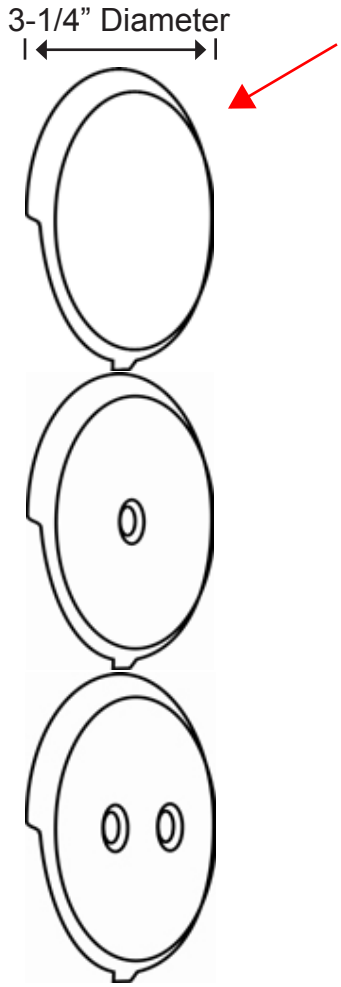

SPECIFICATION

Furnish and install bath waste and overflow assembly as manufactured by LSP Products Group. Available for ABS or PVC Schedule 40.

DESIGN FEATURES

- Overflow elbow has a slight angle to accomodate tub angle
- Available with no hole (Revolver), one hole, and two hole cover plate
- Assemblies come with chrome plated drains and overflow plates
- Available in Lift and Turn, Push Pull, or Toe touch drains.
- Available with our without testing feature
- Full kits include pipe and tee, half kits do not have the pipe and tee included

Full Kit
With Test

Half Kit
No Test

LSP® PRODUCTS GROUP

3689 Arrowhead Drive, Carson City, NV 89706

Phone (800) 854-3215 Fax (800) 243-1777

E-mail sales@lspproducts.com Website www.lspproducts.com

Content matter is subject to change at any time. It is the user's responsibility to ensure the most updated revisions are obtained.

RF/BA (04-11) Rev 1